LFMH INSTALLATION INSTRUCTIONS
C1D2 HAZARDOUS LOCATION MEDIUM FLOODLIGHT
IP66, NEMA4, MARINE OUTSIDE TYPE

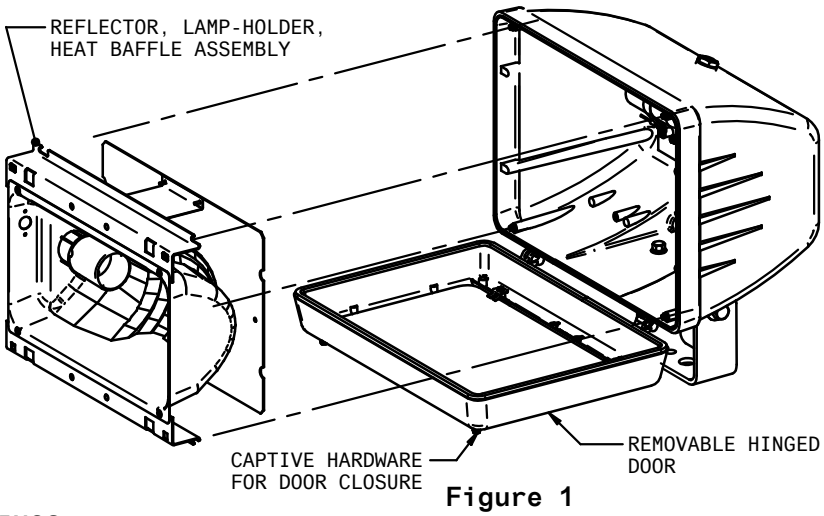

Figure 1

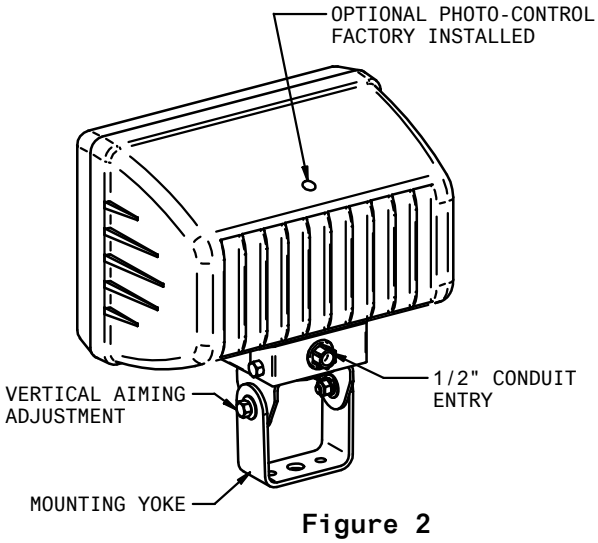

Figure 2

WARNINGS:

* Disconnect power before installation or servicing.
* Install, operate, and maintain to meet all applicable codes; including local and National Electrical Code.
* Labeled ballast voltage must match supply voltage.
* Protect all wiring connections with approved insulators.
* Ensure that all equipment and wiring is properly grounded.

WARNINGS: HAZARDOUS ATMOSPHERES

* Suitable for operation in ambients not exceeding 40°C.
* Do not install where the marked operating temperature exceeds ignition temperatures of hazardous atmospheres.
* To prevent fire or explosion install only as intended.
* To reduce the the risk of ignition of hazardous atmospheres, disconnect luminaire from suppy circuit before opening. Keep tightly closed when in operation.

YOKE MOUNTING - See Fig. 2

1. Use two 3/8" diameter bolts (outboard hole) or one one 3/4" diameter bolt for center bolt mounting.
2. Securely tighten all retaining hardware after aiming.

VERTICAL AIMING - See Fig. 2

1. Two 1/2" diameter bolts (3/4" wrench size) are used to secure the pivot for the vertical aiming.
2. Securely tighten all hardware after aiming.

WIRE ENTRY - See Fig. 2

1. A customer supplied threaded hub or similar watertight fitting is required to fit into the 1/2" classified fitting shown above.
2. Customer supplied fitting must be properly sealed.
3. Supply wire entry into the luminaire must be through the 1/2" conduit fitting.

FIELD WIRING - See Fig. 1 & Fig. 3

1. Loosen the two screws in the door frame using a 5/16" socket. Screw heads are recessed in the doorframe.
2. Hinge the door away from the housing. The door is removable, if desired.
3. Using the 5/16" socket, loosen the (4) screws in the corners of the reflector assembly. It is not necessary to remove these screws.

FIELD WIRING(CONT.) - See Fig. 1 & Fig. 3

4. Slide the reflector to the side to allow the reflector assembly to be removed from the housing. The reflector assembly is connected by a landyard and can hang outside the housing while wiring connections are made.
5. **The incoming voltage supply wire must be secured by the wire tie provided near the wire entry. It is necessary to keep the incoming wiring away from the ballast and reflector due to the heat when the lamp is operating.**

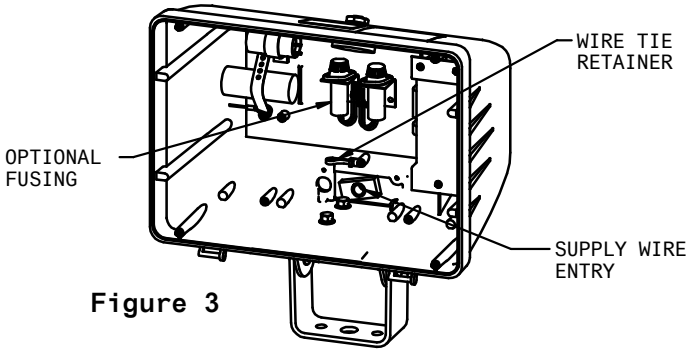

Figure 3

6. The luminaire is supplied with wire extensions on the ballast input to allow for testing at the factory. For ballasts with multiple voltage inputs, these wires are usually attached to the highest voltage tap on the ballast. These extensions can be removed if desired.

BE SURE TO CONNECT THE INCOMING SUPPLY WIRES TO THE CORRECT VOLTAGE INPUT ON THE BALLAST!

If provided with fusing or photo-control, make sure the load side of these items is connected to the proper input voltage.

7. **Make sure all unused ballast input leads are properly insulated.**
8. Replace all components to their proper position and tighten all hardware securely.
9. Replace the door if removed. Close and tighten screws securely to maintain watertightness.

Hubbel Lighting, Inc.

Hubbell Lighting Inc.
701 Millennium Blvd.
Greenville, SC 29607

864-678-1000

93022507
REV. A